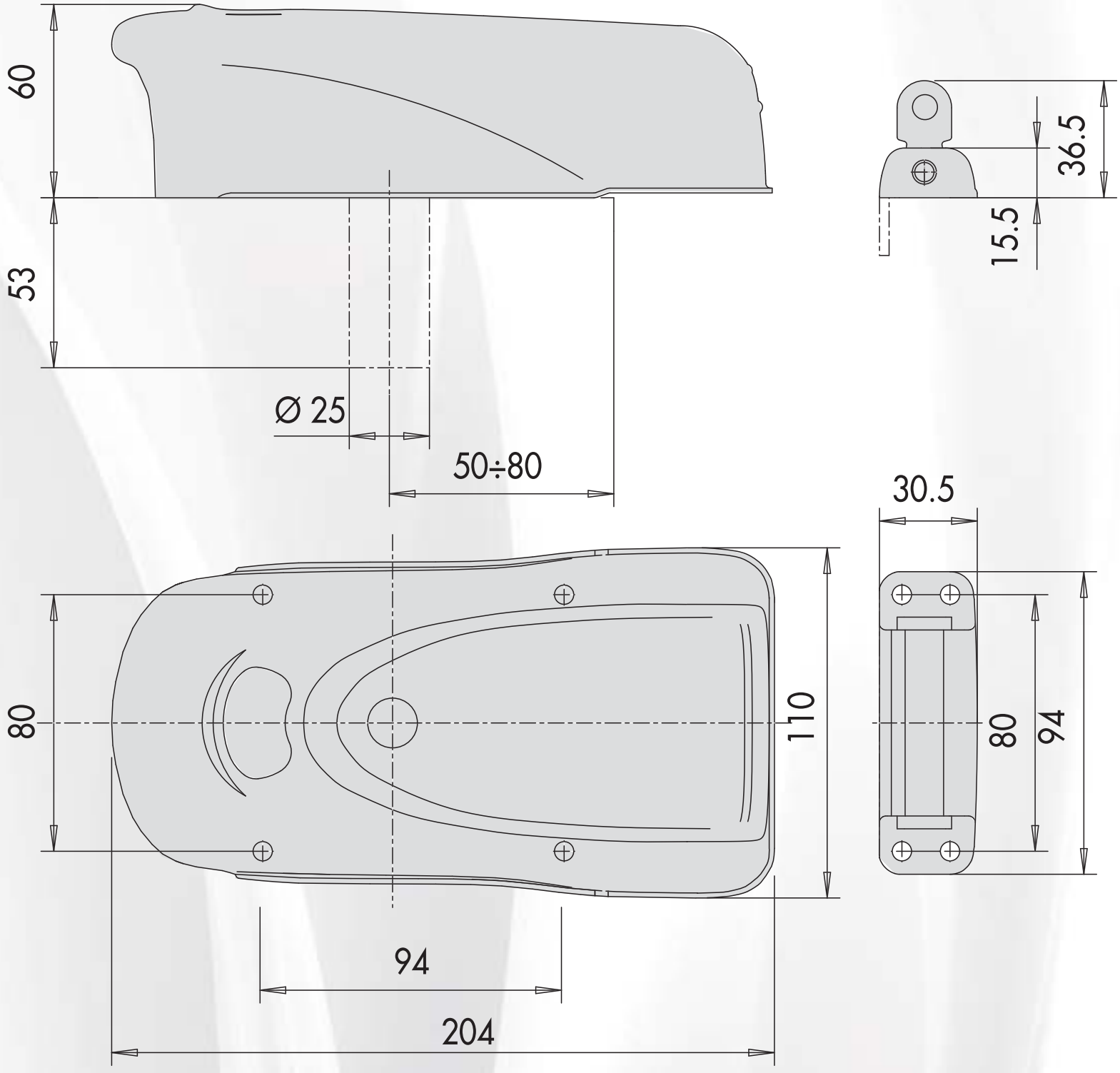
60
53
Ø 25
50÷80
36.5
15.5
30.5
80
110
94
204
80
94